天线产品尺寸图

REV.	DESCRIPTION	APPD.	DATE
A	INITIAL RELEASED	Chen	2024/07/16

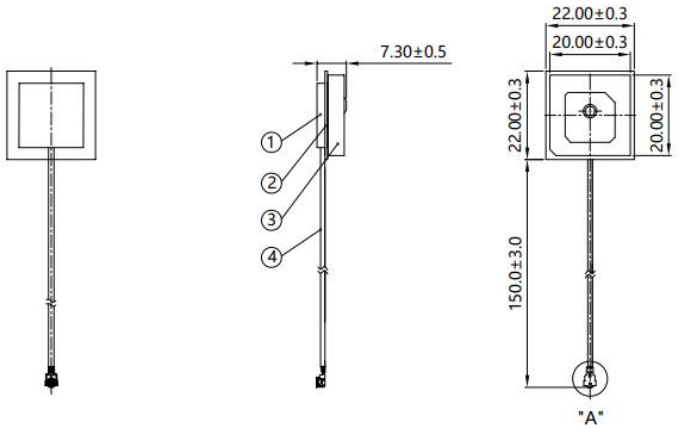

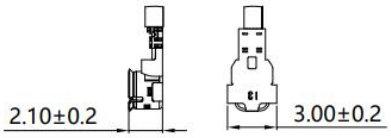

DETAIL A
SCALE 4:1

No.	Name	Material	Color	Treatment	Amount	Remark
4	CABLE ASSY		Black	Φ1.13Coaxial Line ,1.13 RF 1	1	
3	Ceramic Patch		Black	20.0*20.0*4.0mm	1	
2	PCBA		Green	22.0*22.0*0.6mm	1	
1	Shielding Case		Silvery	16.0*16.0*2.0mm	1	

DIMENSIONS ARE IN MILLIMETERS

UNLESS OTHERWISE SPECIFIED
TOLERANCES
ANGLES = ±3°
UP TO 6 = ±0.1
6-40 = ±0.2
40-120 = ±0.6
120-315 = ±1.0
ABOVE 315 = ±1.6

CUS P/N:

PART NO.:
M04-0103730R0A

APPD: 陈建功
CHKD: 陈建功
DR: 董春花

MyAntenna

TITLE:
20*20*4 Active GPS Ceramic Antenna

DWG NO.:

SCALE	SHEET	REV.
1:1	1/1	V01