天线产品尺寸图

REV.	DESCRIPTION	APPD.	DATE
A	INITIAL RELEASED	Chen	2025/06/12

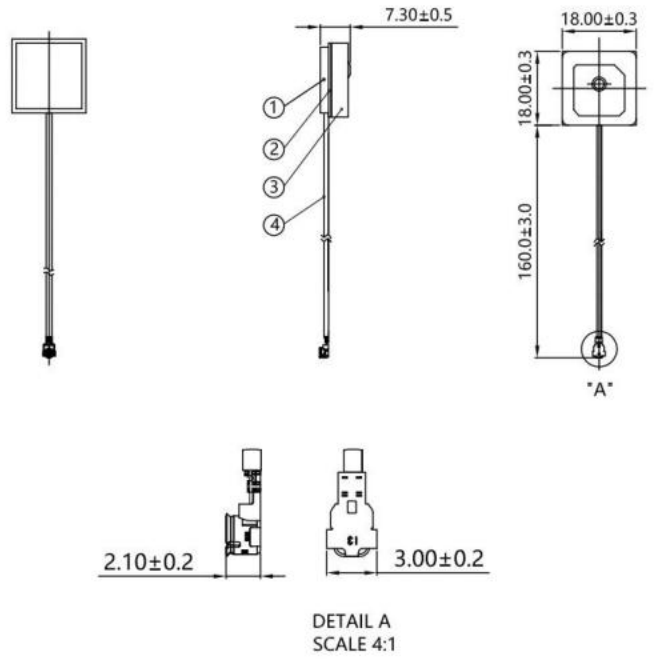

No.	Name	Material	Color	Treatment	Amount	Remark
4	CABLE ASSY		Black	Φ1.13Coaxial Line ,1.13 RF 1	1	
3	Ceramic Patch		Black	18.0*18.0*4.0mm	1	
2	PCBA		Green	18.0*18.0*0.6mm	1	
1	Shielding Case		Silvery	16.0*16.0*2.0mm	1	

DIMENSIONS ARE IN MILLIMETERS

UNLESS OTHERWISE SPECIFIED TOLERANCES
ANGLES = ±3°
UP TO 6 = ±0.1
6-40 = ±0.2
40-120 = ±0.6
120-315 = ±1.0
ABOVE 315 = ±1.6

CUS P/N:

PART NO.: M01-0300280R0A

APPD: 陈建功

CHKD: 陈建功

DR: 董自强

MyAntenna

TITLE: 18*18*4 Active GPS Ceramic Antenna

DWG NO.:

SCALE	SHEET	REV.
1:1	1/1	V01