天线产品尺寸图

REV.	DESCRIPTION	APPD.	DATE
A	INITIAL RELEASED	Chen	2025/05/13

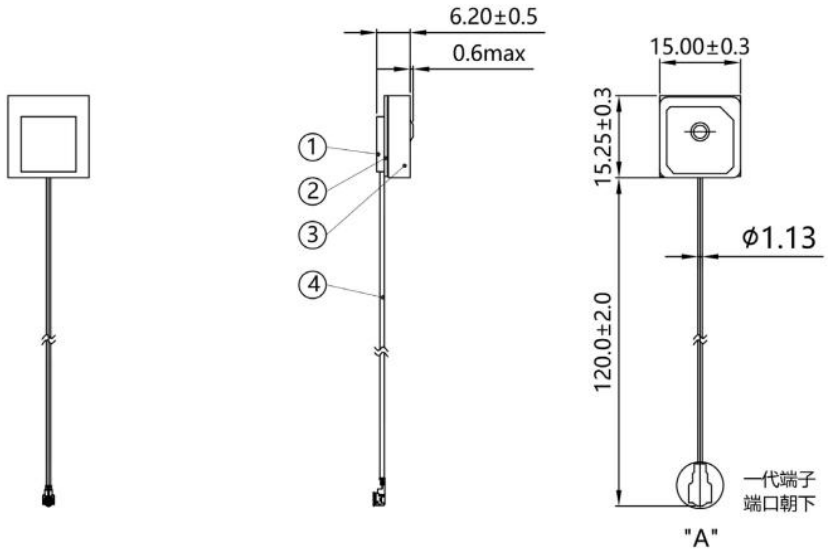

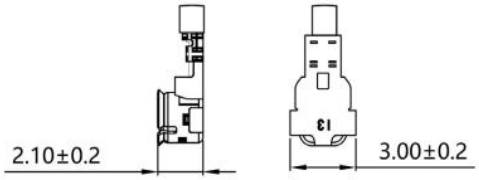

DETAIL A
SCALE 4:1

No.	Name	Material	Color	Treatment	Amount	Remark
4	同轴线		黑色	ϕ1.13*120.0mm CM1	1	
3	陶瓷		黄色	15.0*15.0*4.0mm	1	
2	PCBA		绿色	15.0*15.0*0.6mm	1	
1	屏蔽罩		银色	10.2*10.2*1.4mm	1	

DIMENSIONS ARE IN MILLIMETERS
UNLESS OTHERWISE SPECIFIED TOLERANCES
ANGLES = ±3°
UP TO 6 = ±0.1
6-40 = ±0.2
40-120 = ±0.6
120-315 = ±1.0
ABOVE 315 = ±1.6

CUS P/N: AIGC054
PART NO.: M01-0300260R0A
APPD: 陈建功
CHKD: 陈建功
DR: 董春玫

ABOOSTY 爱比速
TITLE: 15*15*4 GPS 有源天线
DWG NO.:

SCALE	SHEET	REV.
1:1	1/1	V01